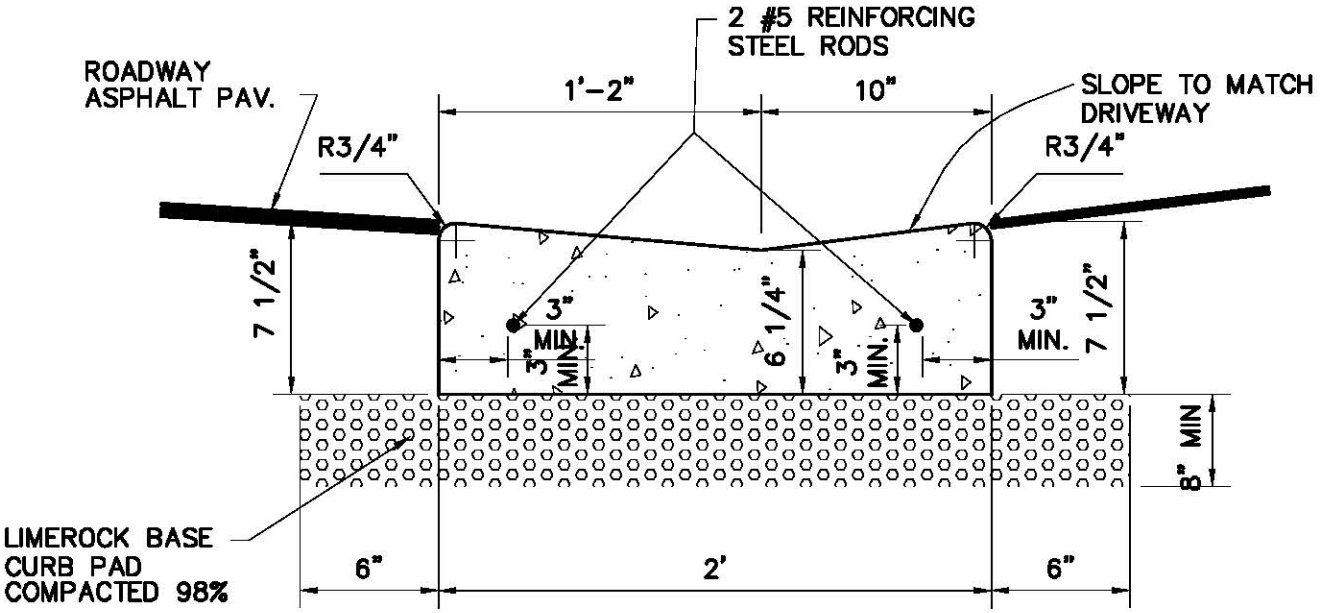


## 24" CONCRETE DROP CURB, (DRIVEWAY)

N.T.S.

F:\work\$ALL\CAD-DWG\STANDARDS\CMB_ STANDARD_DETAILS\Public Works Manual\CMB Roadway Details

| | | | | |
|---|---|---|---|---|
| MIAMIBEACH PUBLIC WORKS DEPARTMENT 1700 CONVENTION CENTER DRIVE, MIAMI BEACH, FL.33139 | APPROVED 12/2006 | REVISED 05/31/2007 | TITLE: ROADWAY DETAILS NO.1 24" CONCRETE DROP CURB, (DRIVEWAY) | RS4 SHEET 4 OF 30 |