J:\ARCHITEKNICS\Normandy Shores\Clubhouse\Plan\06159-P-3.dwg, 1/21/2009 3:38:24 PM, Marios, Marios Lindhein

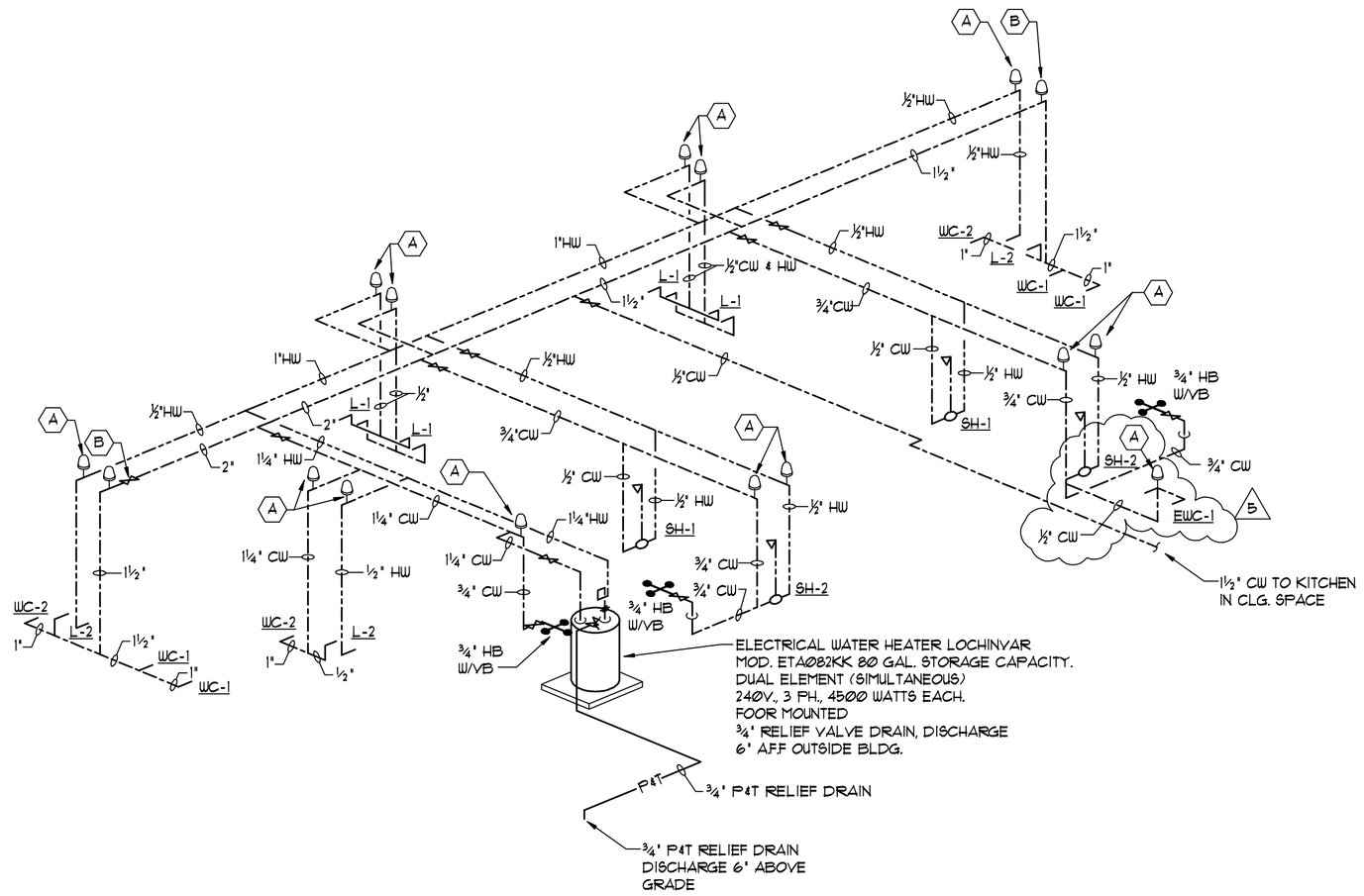

COLD AND HOT WATER PIPING - ISOMETRIC

N.T.S.

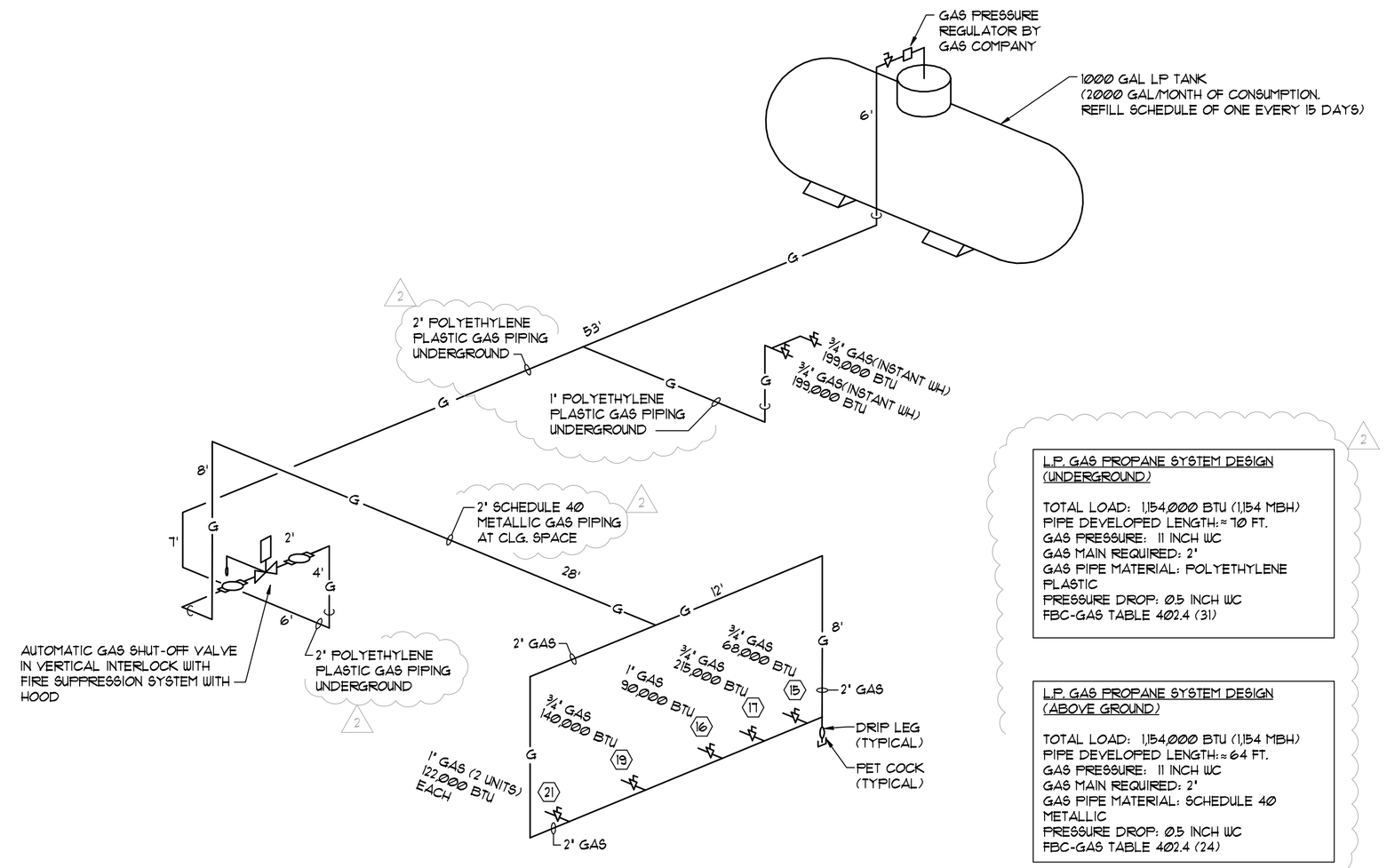

GAS PIPING ISOMETRIC

N.T.S.

LP. GAS PROPANE SYSTEM DESIGN
(UNDERGROUND)

TOTAL LOAD: 1,154,000 BTU (1,154 MBH)
PIPE DEVELOPED LENGTH: = 70 FT.
GAS PRESSURE: 11 INCH WC
GAS MAIN REQUIRED: 2"
GAS PIPE MATERIAL: POLYETHYLENE PLASTIC
PRESSURE DROP: 05 INCH WC
FBC-GAS TABLE 402.4 (31)

LP. GAS PROPANE SYSTEM DESIGN
(ABOVE GROUND)

TOTAL LOAD: 1,154,000 BTU (1,154 MBH)
PIPE DEVELOPED LENGTH: = 64 FT.
GAS PRESSURE: 11 INCH WC
GAS MAIN REQUIRED: 2"
GAS PIPE MATERIAL: SCHEDULE 40 METALLIC
PRESSURE DROP: 05 INCH WC
FBC-GAS TABLE 402.4 (24)

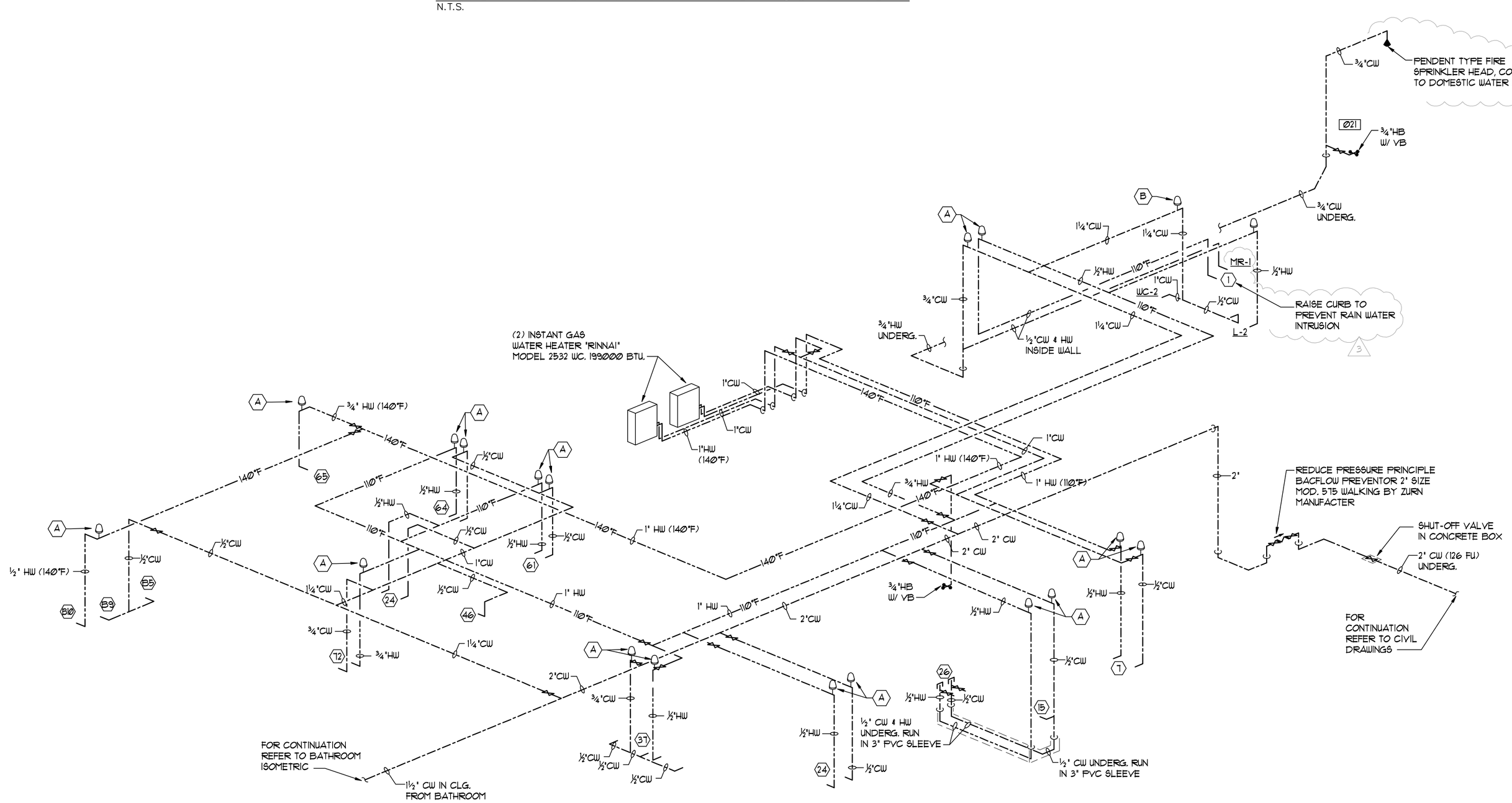

COLD AND HOT WATER PIPING - ISOMETRIC

N.T.S.

ARCHITEKNICS
architects & planners

7450 Southwest 48th. Street
Miami, Florida 33155
Phone (305) 661-5392
Fax (305) 661-5832
info@architeknics.com

www.architeknics.com

NEW BUILDING FOR:

NORMANDY SHORES GOLF COURSE CLUB HOUSE

2401 BIARRITZ DRIVE
MIAMI BEACH, FL. 33141

Project:

Seal

Edward C. Berousky, RA.
License Number: AR0005433

Ramon G. Perez-Alonso, RA.
License Number: AR0007195

Lourdes Rodriguez, AIA.
License Number: AR0011630

Drawing title:

WATER AND GAS PIPING ISOMETRICS

Issue Date: 08-14-08

Revisions:

2	11/26/08	BLDG. DEPT. COMMENTS
3	12/18/08	BLDG. DEPT. COMMENTS
5	01/21/09	GENERAL REVISION

Job No.: 06110
Drawn By: Z.M.
Sheet No.: P-3

project no. 06159

basulto & associates, inc.
consulting engineers
Mechanical/Electrical Reg. # CA0006722
Rene I. Basulto, P.E. #40869
14160 Palmetto Frontage Road
Suite 22 (305) 698-3988
Miami Lakes, Florida 33016 Fax (305) 698-3989