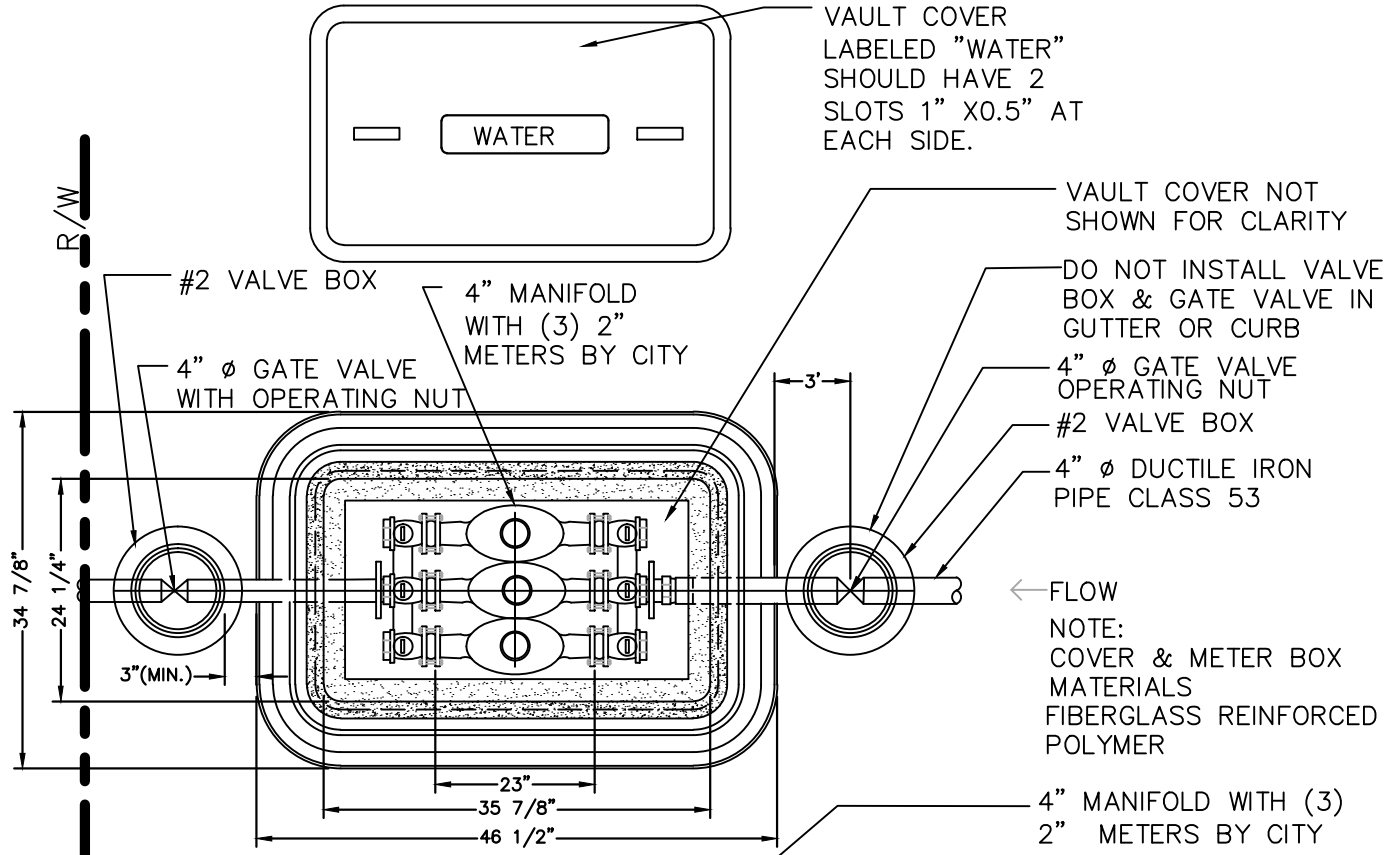

PLAN
N.T.S.

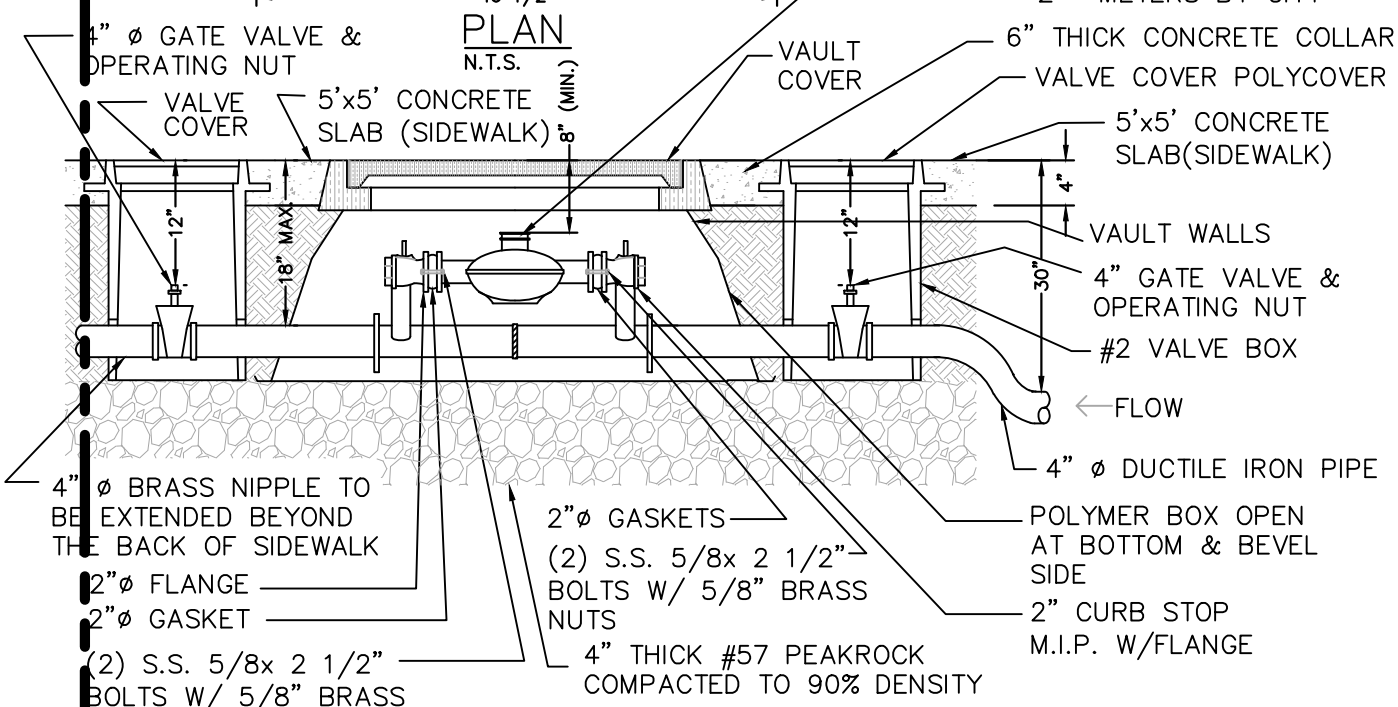

SECTION
N.T.S.

NOTE:
1. METER BOX AND COVER IN TRAFFIC ARE TO BE HS-20 RATED.
2. ALL BRASS FITTINGS TO BE LEAD FREE MATERIAL.

4 " MANIFOLD WITH (3) 2" WATER METERS DETAIL

N.T.S.

F:\WORK\$ALL\CAD-DWG\STANDARDS\CMB_ STANDARD_DETAILS\Public Works Manual\CMB Water Details

MIAMIBEACH PUBLIC WORKS DEPARTMENT 1700 CONVENTION CENTER DRIVE, MIAMI BEACH, FL.33139	APPROVED 12/2006	REVISED 10/26/2007 01/23/2009 01/21/2011 08/12/2013	TITLE: WATER DETAILS NO. 2 4" MANIFOLD WITH (3) 2" WATER METERS DETAIL	WS9