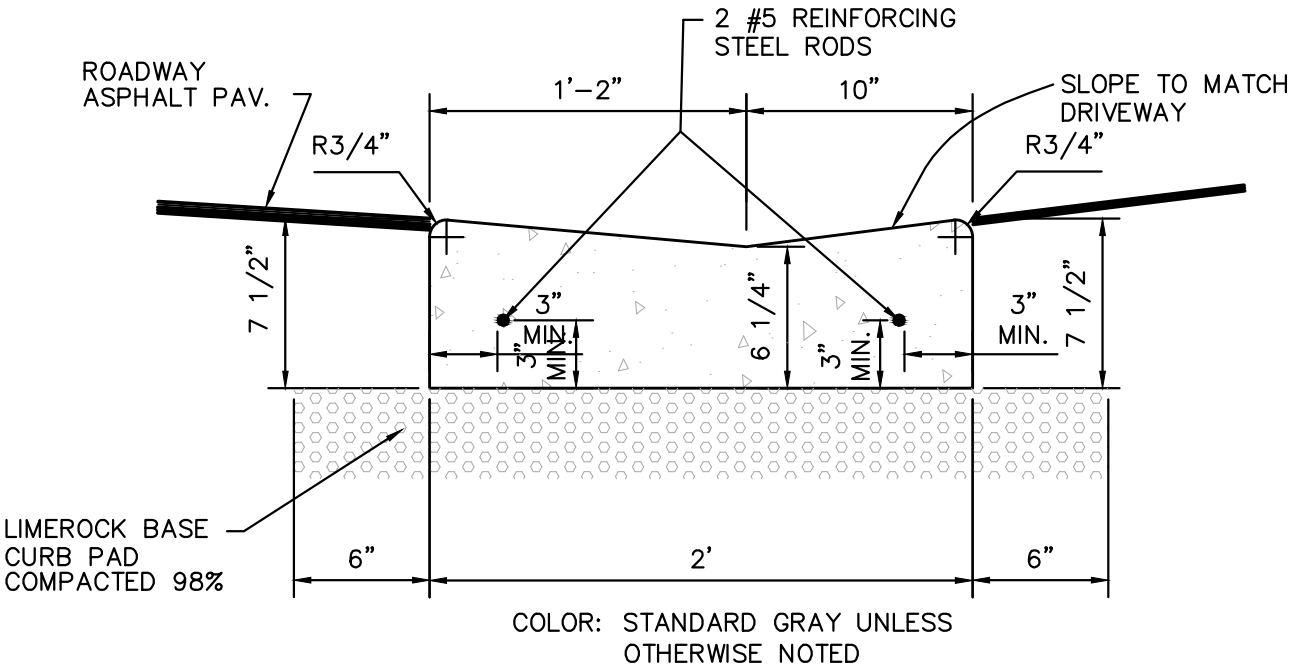

24" CONCRETE DROP CURB, (DRIVEWAY)

N.T.S.

F:\WORK\$ALL\CAD-DWG\STANDARDS\CMB_ STANDARD_DETAILS\Public Works Manual\CMB Roadway Details

MIAMIBEACH PUBLIC WORKS DEPARTMENT 1700 CONVENTION CENTER DRIVE, MIAMI BEACH, FL.33139	APPROVED 12/2006	REVISED 05/31/2007 07/10/2012 02/14/2013	TITLE: ROADWAY DETAILS NO.1 24" CONCRETE DROP CURB, (DRIVEWAY)	RS4