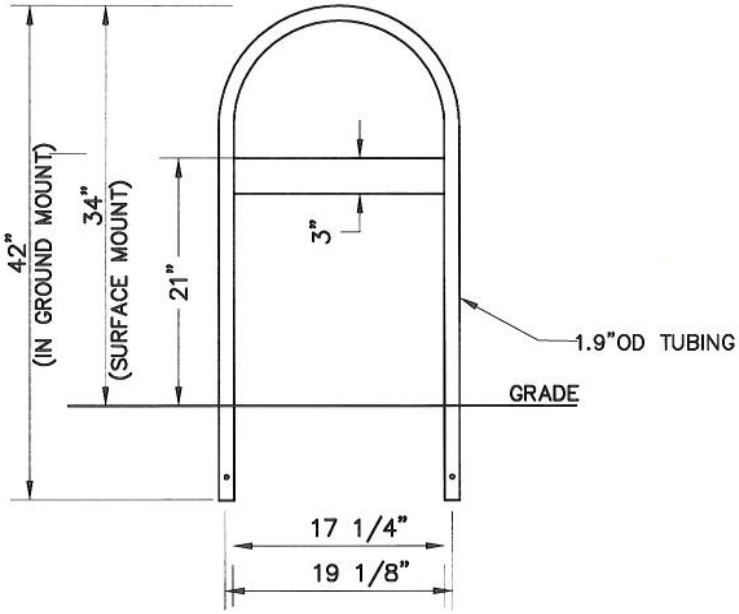


ELEVATION VIEW

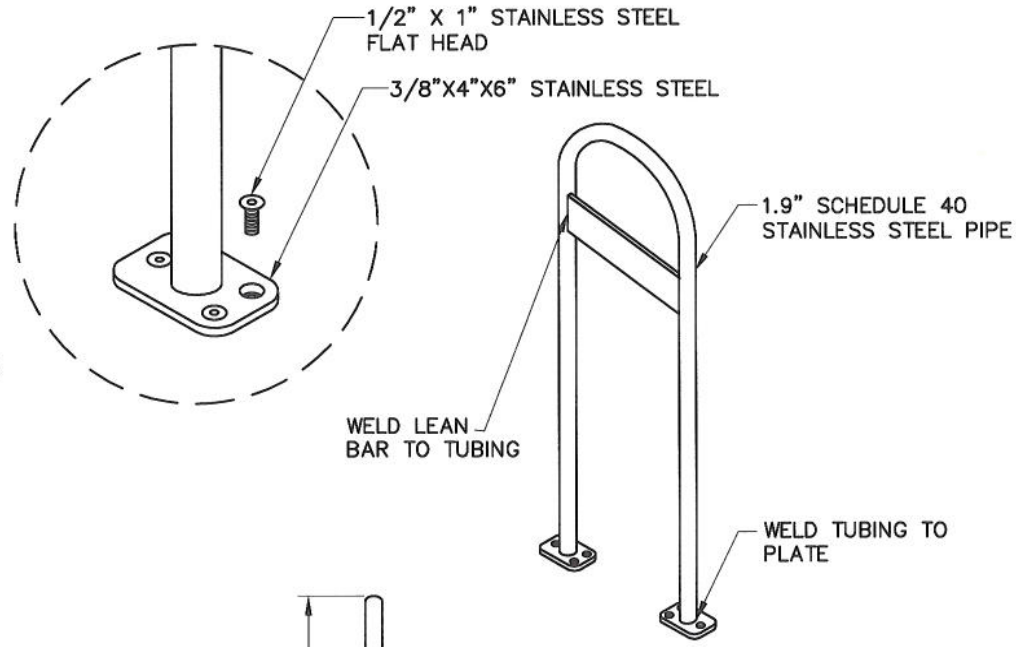


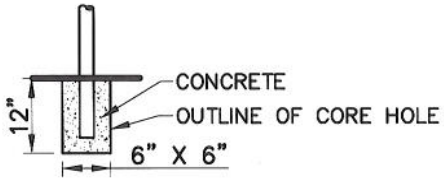


IN-GROUND MOUNT

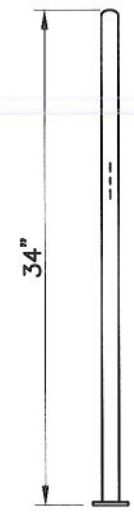


NOTE:

1- STAINLESS STEEL SCHEDULE 40 SATIN #4 POLISH

2- 1/2" x 1" (OR LONGER AS NEEDED) STAINLESS STEEL FLAT HEAD, SOCKET HEAD CAP SCREW SECURE BIKE RACK TO MOUNT.

3- FLUSH BOLTS TO BE USED WITH 1/2" X 13 THREADED RECEIVERS FOR SURFACE MOUNT, OR IN-GROUND POST WITH MATCHING PLATE, WHERE NEEDED.

4- WHEN USING MORE THAN ONE LOOP, SEPERATION BETWEEN EACH LOOP WILL BE A MINIMUM OF 28".

5- CONCRETE 2500 PSI

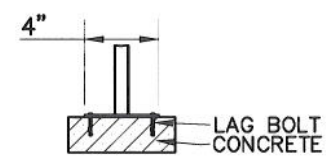


SURFACE GUSSET MOUNT (SG)

# BICYCLE U RACK DETAIL

N.T.S.

C:\8b142015372c43f3ce0b81e9\CMB Water Details\pUBLIC WORKS MANUAL COPY DISK\CMB Bicycle Details

MIAMIBEACH
PUBLIC WORKS DEPARTMENT
1700 CONVENTION CENTER DRIVE, MIAMI BEACH, FL 33139

APPROVED 12/2006

REVISED

TITLE:

BICYCLE DETAILS NO. 1
BICYCLE U RACK DETAIL

BK3

SHEET 3 OF 3